Primus blue hybrid odor trap

for shower drains and floor drains
HL540Prblue(-I/Q), HL541Prblue(-I/Q), HL5100Prblue and HL3100Prblue

With the reliable HL540Prblue shower drain system, HL Hutterer & Lechner presents a well-engineered further development for modern, barrierfree showers. The focus of the new features is the well-proven Primus blue hybrid odor trap, which is now also available in the HL540Prblue. Even when the sealing water has dried out, the hybrid odor trap reliably prevents unpleasant sewer smells.
The well-known strengths of the HL540Prblue shower drain are simple, flexible installation, maximum safety and reliable function.

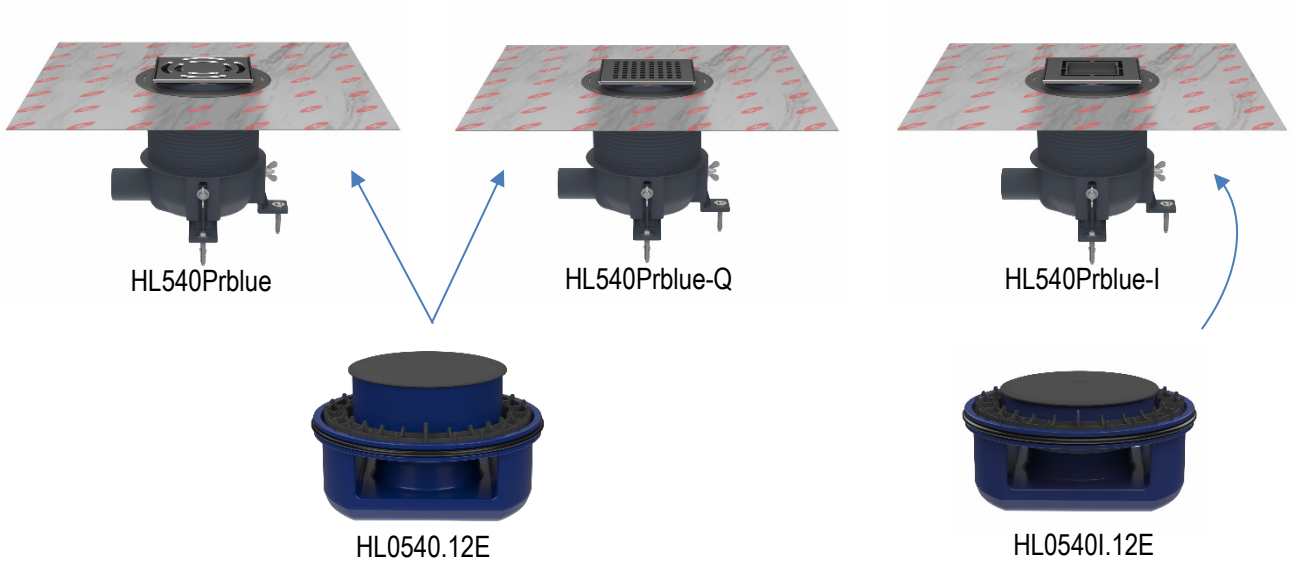

Changes compared to the previous model:

Primus blue hybrid odor trap now also in the HL540Prblue

The Primus blue hybrid odor trap combines a hydraulic and a mechanical odor barrier and therefore remains effective even where conventional odor traps reach their limits.

This system combines the function of a conventional water-seal odor trap with a sealing water height of 5 cm and a mechanical odor seal, achieving a significantly higher level of operational reliability. The Primus blue hybrid odor trap thus meets the new requirements of the EN 1253 standard according to both Part 1 and Part 8.

In addition, the system prevents backflow of accumulating waste water up to 20 cm.

Primus blue at a glance

- Mechanical seal + water seal
- Tight up to +800 Pa overpressure and -400 Pa negative pressure
- Works even when dried out
- Removable, cleanable, free access to the pipe
- Complies with ÖNORM B2501 and EN 1253 Part 1 & Part 8
- Stable drainage behavior even under unfavorable pressure conditions – drainage capacity of 0.8 l/s

Height adjustment, new mounting angles

The drain body is screwed directly onto the bare concrete with new, sturdy mounting angles and thus stays reliably in position during the construction phase. The new plastic mounting angles have been adapted to and standardized with those of the HL541Prblue.

New article designation HL541Prblue

No technical changes have been made to the HL541 shower drain, which has been fitted with the Primus blue hybrid odor trap for some time. Only the article designation has been aligned with the Primus blue shower drain systems.

- HL541 → **HL541Prblue**
- HL541i → **HL541Prblue-I**
- HL541Q → **HL541Prblue-Q**

Primus blue now also in HL5100Prblue and HL3100Prblue

The HL5100Pr (DN50/75 horizontal) and HL3100Pr (DN50/75/110 vertical) floor drains are being fitted with the Primus blue hybrid odor trap. The article designations of these floor drains will in future be HL5100Prblue and HL3100Prblue.

HL540Prblue Primus blue shower drain, CONSTRUCTION HEIGHT MIN. 80 MM!
HL540Prblue-I Primus blue shower drain with individual cover, CONSTRUCTION HEIGHT MIN. 80 MM

Data

Drainage capacity	Water height 10 mm 20 mm HL540Prblue 0,7 l/s 0,8 l/s HL540Prblue-I 0,6 l/s 0,7 l/s
Material	PP / stainless steel, grate frame HL540Prblue + HL540Prblue-I: V4A Grate HL540Prblue: V2A Grate HL540Prblue-I: V4A
Outlet	DN50 horizontal
Construction height	adjustable from 80 – 200 (250) mm
Standard	EN 1253
Load class	K3 – max. 300 kg
Odor trap	Primus blue, combined odor trap with sealing water and mechanical odor trap (completely odor-tight even without water). Backflow-proof up to 20 cm backwater height.
Additional information	incl. removable odor trap insert, fleece laminated waterproofing kit, sound insulated height adjustable mounting angles, hair strainer, lot cover and construction support frame. Sound insulation tested! Test report see www.hl.at

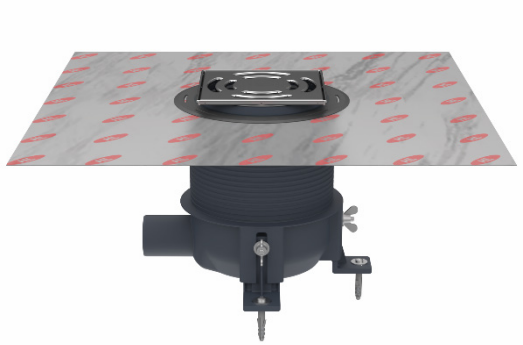

HL No.	Material	Dimension	Weight	EAN	Pcs./pack
540Prblue	PP/stainless steel	DN50	1533 g	+006069	1
540Prblue-I	PP/stainless steel	DN50	1898 g	+006083	1
540Prblue-Q	PP/stainless steel	DN50	1898 g	+006106	1

HL541Prblue Primus blue shower drain, CONSTRUCTION HEIGHT MIN. 62 MM!
HL541Prblue-I Primus blue shower drain with individual cover, CONSTRUCTION HEIGHT MIN. 62 MM

Data

Drainage capacity	Water height 10 mm 20 mm HL541Prblue 0,4 l/s 0,5 l/s HL541Prblue-I 0,4 l/s 0,45 l/s
Material	PP / stainless steel, grate frame HL541Prblue + HL541Prblue-I: V4A Grate HL541Prblue: V2A Grate HL541Prblue-I: V4A
Outlet	DN40/50 horizontal
Construction height	from 62 – 200 (230) mm
Standard	EN 1253
Load class	K3 – max. 300 kg
Odor trap	Primus blue, combined odor trap with sealing water and mechanical odor seal (completely odor-tight even without water). Backflow-proof up to 50 cm backwater height.
Additional information	incl. removable odor trap insert, fleece laminated waterproofing kit, height adjustable mounting angles, hair strainer, lot cover and construction support frame. Sound insulation tested! Test report see www.hl.at

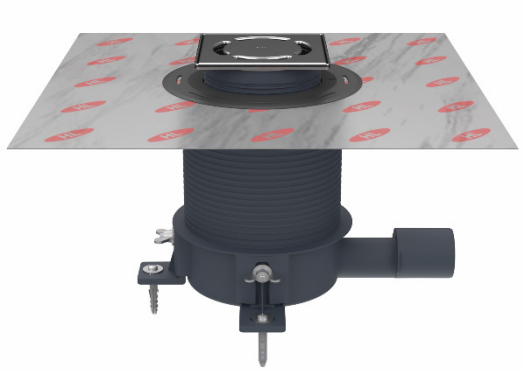

HL No.	Material	Dimension	Weight	EAN	Pcs./pack
541Prblue	PP/stainless steel	DN40/50	1121 g	+006236	1
541Prblue-I	PP/stainless steel	DN40/50	1388 g	+006250	1
541Prblue-Q	PP/stainless steel	DN40/50	1819 g	+006274	1

HL3100Prblue floor drain “60 Plus” with very high drainage capacity and Primus blue odor trap

Data

Drainage capacity	1,05 l/s
Material	PE / stainless steel
Outlet	DN50/75/110 Vertical, push-fit and weldable
Grate frame	Stainless steel frame V4A, 145 x 145 mm, “Click-clack locking system”, can be cut to height
Inlet	Stainless steel grate 138 x 138 mm V2A
Odor trap	Primus blue, combined odor trap with sealing water and mechanical odor seal (completely odor-tight even without water). Backflow-proof up to 20 cm backwater height.
Standard	EN 1253, ÖNORM B2501
Load class	K3 – max. 300 kg
Recommended for	Floor drain with high drainage capacity, for high-performance shower systems, e.g. rain showers
Additional information	Floor drainage with irregular use, guarantees odor tightness even without water; refilling with sealing water is not necessary! Temperature resistant up to 85 °C



HL No.	Material	Dimension	Weight	EAN	Pcs./pack
3100Prblue	PE / stainless steel	DN50/75/110	1079 g	+025435	1

HL5100Prblue floor drain “60 Plus” with very high drainage capacity and Primus blue odor trap

Data

Drainage capacity	0.90 l/s at 20 mm water height 0.70 l/s at 10 mm water height
Material	PE / stainless steel
Outlet	DN50/75 Horizontal, push-fit and weldable
Grate frame	Stainless steel frame V4A, 145 x 145 mm, “Click-clack locking system”, can be cut to height
Inlet	Stainless steel grate 138 x 138 mm V2A
Odor trap	Primus blue, combined odor trap with sealing water and mechanical odor seal (completely odor-tight even without water). Backflow-proof up to 20 cm backwater height.
Standard	EN 1253, ÖNORM B2501
Load class	K3 – max. 300 kg
Recommended for	e.g. level-access showers with large water volumes
Additional information	With stainless steel frame, floor drainage with irregular use, guarantees odor tightness even without water; refilling with sealing water is not necessary! Sound insulation according to ÖNORM B8115-2 is achieved with the HL6200 sound protection pad. See chapter Accessories! Temperature resistant up to 85 °C



HL No.	Material	Dimension	Weight	EAN	Pcs./pack
5100Prblue	PE / stainless steel	DN50/75	1069 g	+025459	1

Previous article no.	Article no.	Article description
HL540	**HL540Prblue**	Shower drain “Primus blue” with waterproofing kit, hair strainer and mounting angles
HL540I	**HL540Prblue-I**	Shower drain “Primus blue” with tile tray, waterproofing kit, hair strainer and mounting angles
HL540-Quadra	**HL540Prblue-Q**	Shower drain “Primus blue” with solid design stainless steel grate “Quadra”, waterproofing kit, hair strainer and mounting angles
HL0540.5E	**HL0540.5E**	Completion set for “Primus blue” shower drain with stainless steel grate, waterproofing kit, odor trap, click-clack grate frame and construction support frame
HL5100Pr	**HL5100Prblue**	Floor drain DN50/75 horizontal with odor trap “Primus blue”, 145 x 145 mm click-clack / 138 x 138 mm
HL3100Pr	**HL3100Prblue**	Floor drain DN50/75/110 vertical with odor trap “Primus blue”, 145 x 145 mm click-clack / 138 x 138 mm
HL541	**HL541Prblue**	Shower drain “Primus blue” with waterproofing kit, hair strainer and mounting angles
HL541i	**HL541Prblue-I**	Shower drain “Primus blue” with tile tray, waterproofing kit, hair strainer and mounting angles
HL541Q	**HL541Prblue-Q**	Shower drain “Primus blue” with solid design stainless steel grate “Quadra”, waterproofing kit, hair strainer and mounting angles
HL3910Pr	**HL3910Prblue**	Grate frame d 146 mm with odor trap “Primus blue”, stainless steel frame click-clack 145 x 145 mm, stainless steel grate 138 x 138 mm
HL2040	**HL0540.12E**	Odor trap Primus blue for HL540Prblue
HL2040I	**HL0540I.12E**	Odor trap Primus blue for HL540Prblue-I
HL2100	**HL05100.12E**	Odor trap Primus blue for HL3100Prblue and HL5100Prblue
HL0540.3E	**HL0540.6E**	3 pcs. plastic mounting angles incl. screws

Note for existing installations

- The new odor traps HL0540.12E, HL0540I.12E and HL05100.12E replace the previous odor trap inserts HL2040, HL2040I and HL2100. The new odor traps are compatible with the drain bodies of the previous models and can be used as spare parts.
- The new plastic mounting angles are not compatible with those of the previous models.

Available from: Immediately

Price: see price list