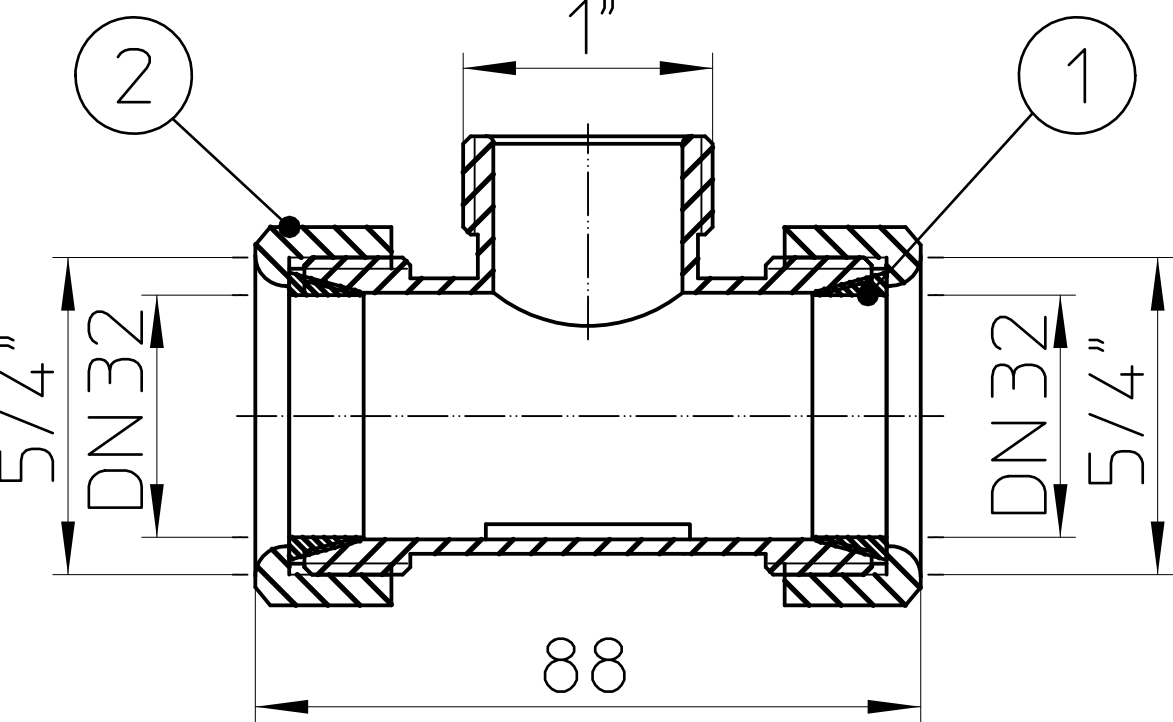
1"
2
1
5/4"
DN 32
DN 32
5/4"
88